MUGEN SEIKI		**Tires**		**Clutch settings**		**Front shocks**		**Engine**	
		Front shore	left 35 / right 35	**Shoe/Bell**	STD / ALU	**Piston**	1.1X3	**Type**	O.S T1202
Date/ Track	2016-10-23 HOMESTEAD US	**Rear shore**	left 37 / right 37	**Bell clearance (mm)**		**Oil**	1000	**Plug/ Fuel**	Plug RP6 GOLD / Fuel
Driver	JJ WANG	**Front ∅**	left 58 / right 58	**Spring/adj. Nut(mm)**	STD /	**Spring**	SERPENT RED	**Pipe/ Manifold**	Pipe O.S / Manifold O.S
Temp. °C.	air 25 / track	**Rear ∅**	left 60 / right 60	**Bell axial play (mm)**		**Rear shocks**		**Gear ratio chart**	
Track layout/ traction	technical ○ low ○ mixed ○ medium ✓ fast ✓ high ○	**Differential**		**Gearing**		**Piston**	1.1X3		
		Front diff. oil cst.	500000	**1st gear**	54 / 15	**Oil**	1000		
		Rear diff. oil cst.	60000	**2n gear**	48 / 20	**Spring**	SERPENT RED		

Pinion \ Spur		1st 52	1st 53	1st 54	2nd 47	2nd 48	2nd 49
1st	14	7,614	7,761	7,907			
	15	7,107	7,243	7,38			
2nd	19				5,071	5,179	5,278
	20				4,818	4,92	5,023
	21				4,588	4,686	4,783

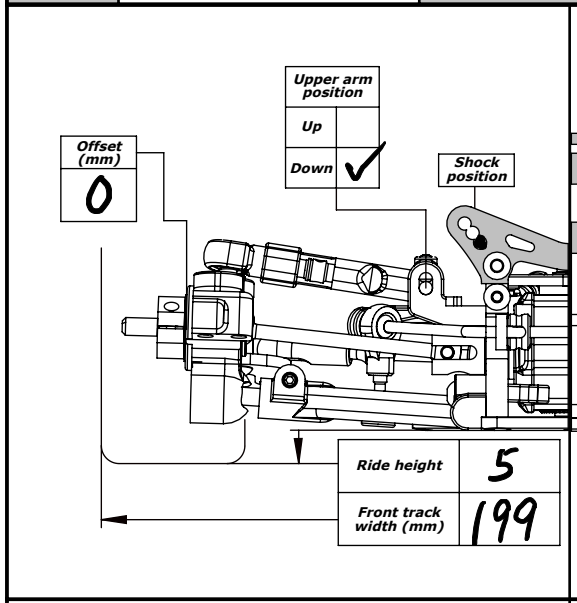

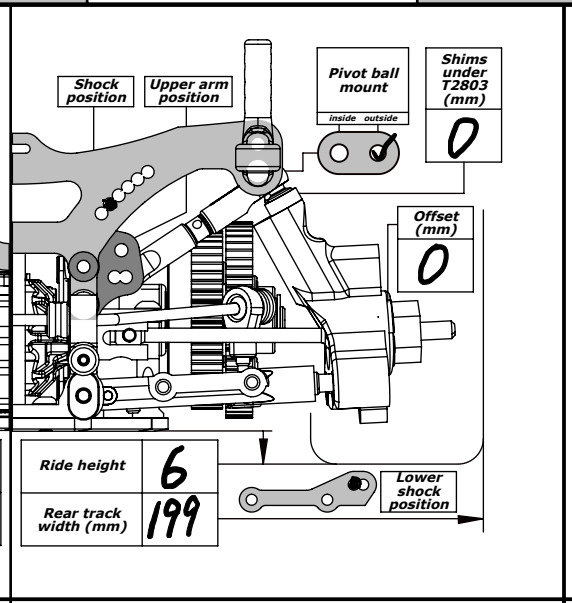

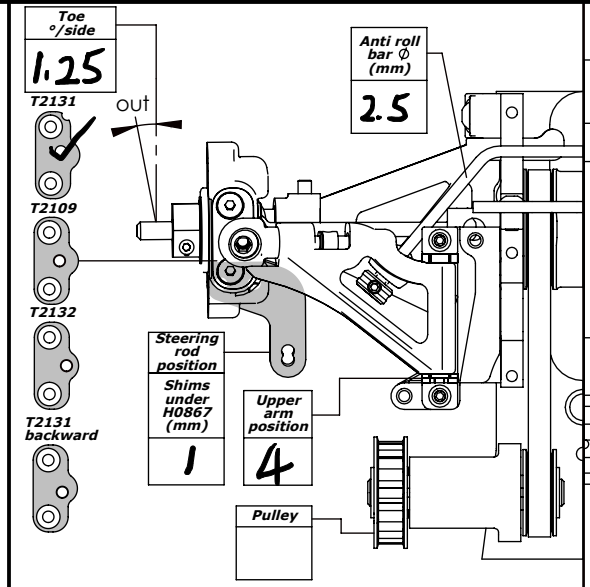

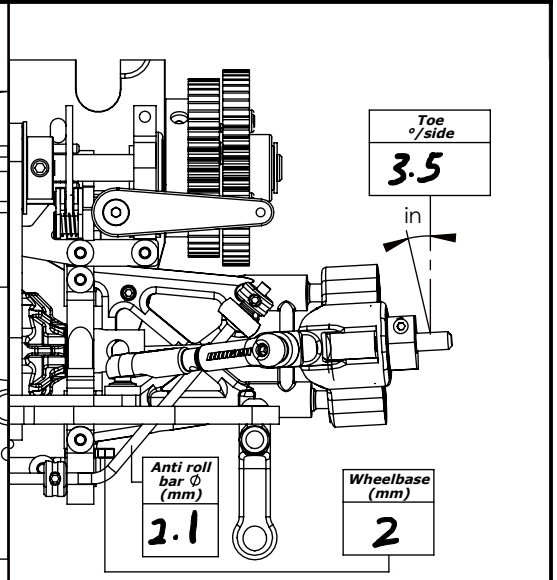

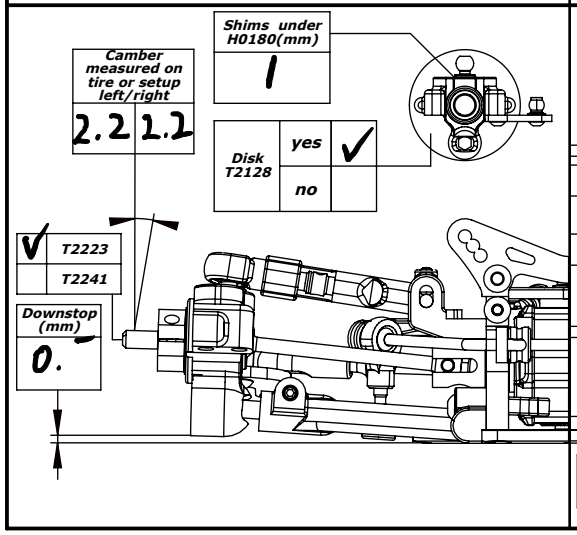

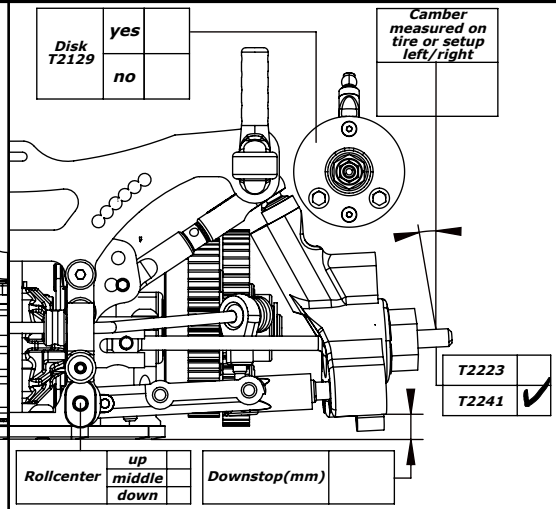

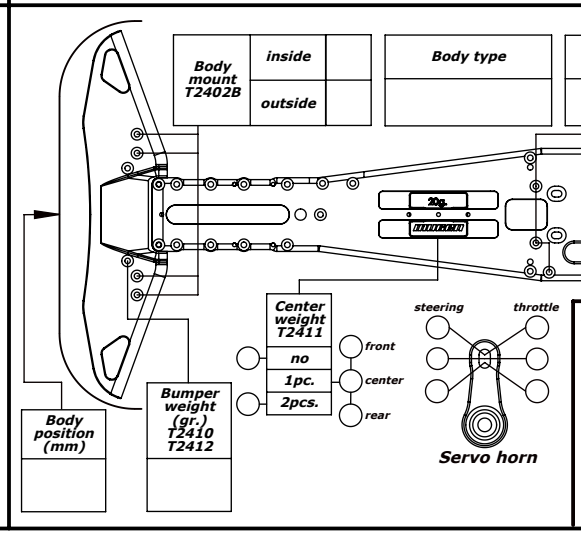

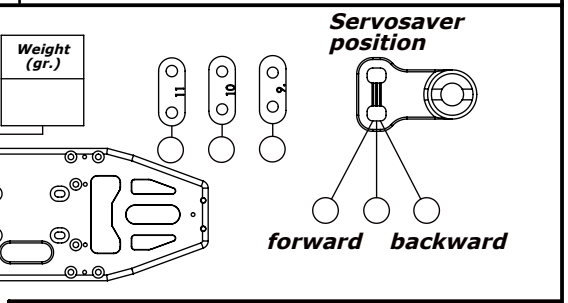

Note: